Dart Aerospace Ltd.

Date: Thursday, 9/20/2007 3:26:24 PM
User: Kim Johnston

Process Sheet

Split

Customer	: CU-DAR001 Dart Helicopters Services	Drawing Name	: EXTRUSION 'I' BEAM TUBE 4"
Job Number	: 34729		
Estimate Number	: 10154		
P.O. Number	: N/A	Part Number	: D25001190
This Issue	: 9/20/2007 S.O. No. : N/A	Drawing Number	: D2500 REV G
Prsht Rev.	: NC	Project Number	: N/A
First Issue	: N/A Type : PURCHASED PARTS	Drawing Revision	: G
Previous Run	: 29602	Material	: N/A
Written By	:	Due Date	: 10/10/2007 Qty: ~~80~~ 63 Um: Each
Checked & Approved By	: 07.09.20		
Comment	: Est: G 02.09.05 Added DSK 066 KJ/RF est H 07.07.06 rev G dwg EC		

Additional Product

Job Number:

Seq. #:	Machine Or Operation:	Description :
1.0	PG	PURCHASING

Comment: PURCHASING
Issue P/O: 4645
a) Extrude as per Dwg D2500
b) Material: 6061-T6 (QQ-A-200/8)
c) Minimum yield tensile strength = 35 ksi
d) Minimum ultimate tensile strength = 38 ksi
e) Minimum elongation = 8%
f) Order at 190" long
g) Bon L Canada Inc. tool # 897105
h) To be packed per DSK 066
i) Pull test to ASTM standard B221 required.
j) Material certification is required

CL 07/09/21
80

2.0	D25001190P	Ext'n -'I' Beam Tube 4"

Comment: Qty.: 1.0000 Each(s)/Unit Total : 80.0000 Each(s)
EXTRUSION 'I' BEAM TUBE 4"

3.0	PACKAGING 1	PACKAGING RESOURCE #1

Comment: PACKAGING RESOURCE #1
Receive & Inspect For Transit Damage
Ensure material certification is attached

07/09/21 63

4.0	QC6	DIMENSIONAL CHECK

Comment: DIMENSIONAL CHECK
Inspect dimensions per Dwg D2500
Check Pull test per Dwg D2500 for compliance page attached.

Ed 2/10/02

Form: process

Dart Aerospace Ltd

W/O:		WORK ORDER CHANGES					
DATE	STEP	PROCEDURE CHANGE	By	Date	Qty	Approval Chief Eng / Prod Mgr	Approval QC Inspector

Part No: _____ PAR #: _____ Fault Category: _____ NCR: Yes (No) DQA: ____ Date: 03/04/12

QA: N/C Closed: _____ Date: _____

NCR:		WORK ORDER NON-CONFORMANCE (NCR)						
DATE	STEP	Description of NC Section A	Corrective Action Section B			Verification Section C	Approval Chief Eng	Approval QC Inspector
			Initial Chief Eng	Action Description Chief Eng	Sign & Date			

NOTE: Date & initial all entries

Date: Thursday, 9/20/2007 3:26:25 PM
User: Kim Johnston

Process Sheet

Customer: CU-DAR001 Dart Helicopters Services

Drawing Name: EXTRUSION 'I' BEAM TUBE 4"

Job Number: 34729

Part Number: D25001190

Job Number:

Seq. #:	Machine Or Operation:	Description :
	Check hardness with Webster tester	
5.0	PACKAGING 1	PACKAGING RESOURCE #1
	Comment: PACKAGING RESOURCE #1 Identify and Stock Location:_____	2/10/11 SP (63a)
6.0	QC21	FINAL INSPECTION/W/O RELEASE
	Comment: FINAL INSPECTION/W/O RELEASE	(63) 02/10/12

Job Completion

LL 02.10.12

Form: process

Dart Aerospace Ltd

W/O:		WORK ORDER CHANGES					
DATE	STEP	PROCEDURE CHANGE	By	Date	Qty	Approval Chief Eng / Prod Mgr	Approval QC Inspector

Part No: _____ PAR #: _____ Fault Category: _____ NCR: Yes No DQA: _____ Date: _____

QA: N/C Closed: _____ Date: _____

NCR:		WORK ORDER NON-CONFORMANCE (NCR)						
DATE	STEP	Description of NC Section A	Corrective Action Section B			Verification Section C	Approval Chief Eng	Approval QC Inspector
			Initial Chief Eng	Action Description Chief Eng	Sign & Date			

NOTE: Date & initial all entries

DESIGN	DRAWN BY	DART AEROSPACE LTD HAWKESBURY, ONTARIO, CANADA	
CHECKED	APPROVED	DRAWING NO. D2500	REV. G SHEET 1 OF 3
DATE 07.04.17		TITLE EXTRUSION	SCALE NTS

A	96.03.19	NEW ISSUE
B	96.03.24	CHANGE INTERNAL WEB
C	96.04.26	ADD D2500-3 WEB
D	96.10.07	ADD MATERIAL PROPERTIES
E	96.10.24	CHANGE MATERIAL TEMPER
F	97.09.29	CHANGE MAT. TO 6061-T6
G	07.04.17	ADD NOTES 3,5,6

RELEASED 07.06.28

1. MATERIAL: 6061-T6 (QQ-A-200/8)

   MINIMUM TENSILE YIELD STRENGTH = 35 KSI
   MINIMUM ULTIMATE TENSILE STRENGTH = 38 KSI
   MINIMUM ELONGATION = 8%

   A SAMPLE FROM EACH BATCH WILL BE PULL TESTED TO ASTM STANDARD B221 BY AN APPROVED TESTING FACILITY TO ENSURE THAT THE BATCH MEETS THE ABOVE MINIMUM MECHANICAL PROPERTIES

2. BREAK ALL SHARP CORNERS 0.010 MAX

3. ALL DIMENSIONS ARE IN INCHES

4. TOLERANCES ARE PER DART QSI 018 UNLESS OTHERWISE NOTED.

5. FOR D2500-1 PART NUMBER IS D2500-1-XXX WHERE XXX IS CUT LENGTH (EX. D2500-1-190 IS 190" LONG)
   D2500-1 EXTRUSION MANUFACTURED FROM:
   A) BON L DIE # 897015 -> PREFERRED
   B) CARADON MIDEAST DIE # PAH-28030
   C) CARADON MTL DIE # MH-18868

6. FOR D2500-3, PART NUMBER IS D2500-3-XXX WHERE XXX IS CUT LENGTH IN INCHES (EX. D2500-3-100 IS 100" LONG)
   D2500-3 EXTRUSION MANUFACTURED FROM:
   A) CARADON INDALEX DIE # MS-18867

DESIGN	DRAWN BY	DART AEROSPACE LTD HAWKESBURY, ONTARIO, CANADA	
CHECKED	APPROVED	DRAWING NO. D2500	REV. G SHEET 2 OF 3
DATE 07.04.17		TITLE EXTRUSION	SCALE 1:1

RELEASED
07.06.28

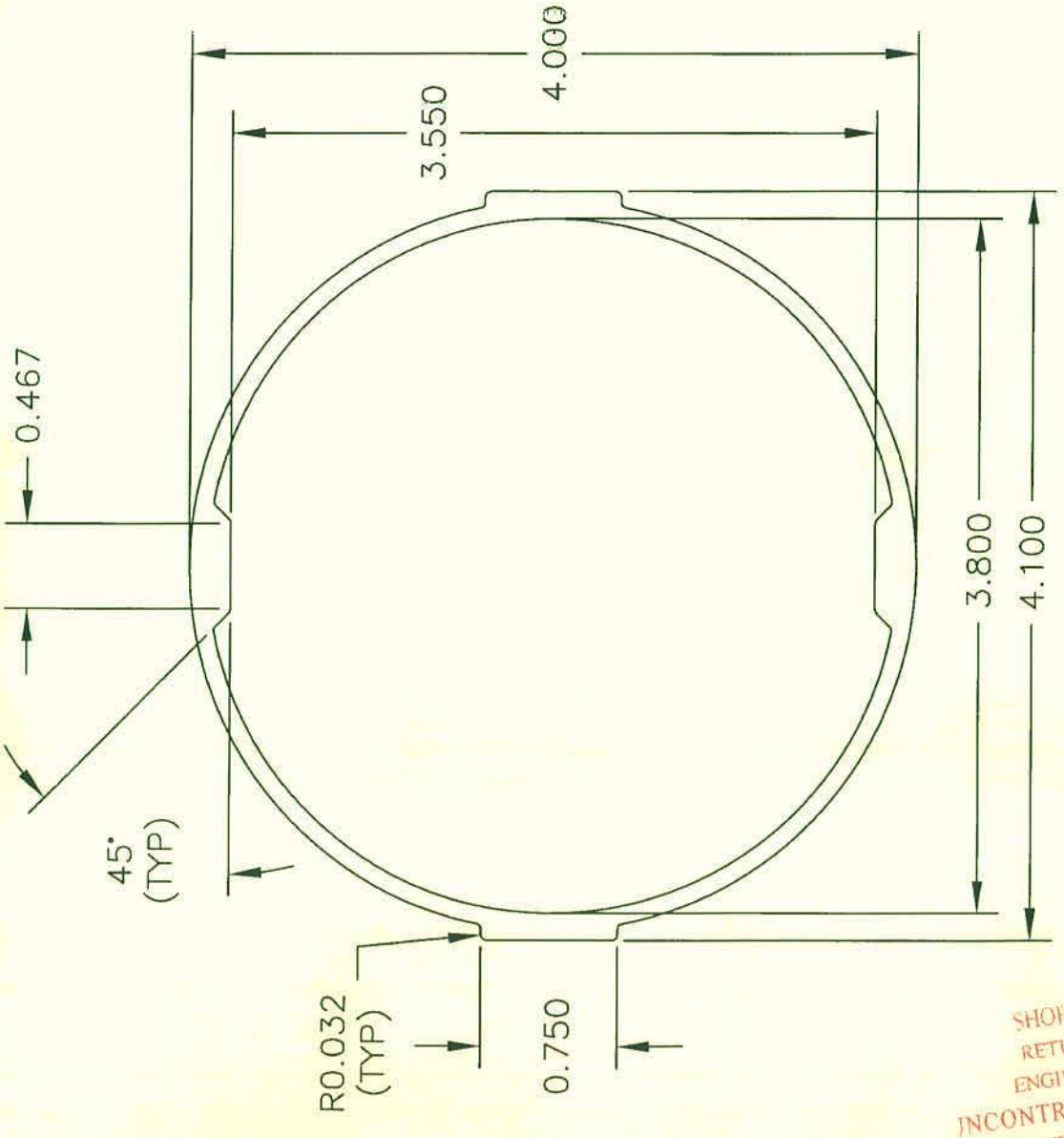

D2500-1

SHOP COPY
RETURN TO
ENGINEERING
UNCONTROLLED COPY
SUBJECT TO AMENDMENT
WITHOUT NOTICE
WORK ORDER
NO. 34729

DESIGN	DRAWN BY	DART AEROSPACE LTD HAWKESBURY, ONTARIO, CANADA	
CHECKED	APPROVED	DRAWING NO. D2500	REV. G SHEET 3 OF 3
DATE 07.04.17		TITLE EXTRUSION	SCALE 1:1

RELEASED
07 06. 28

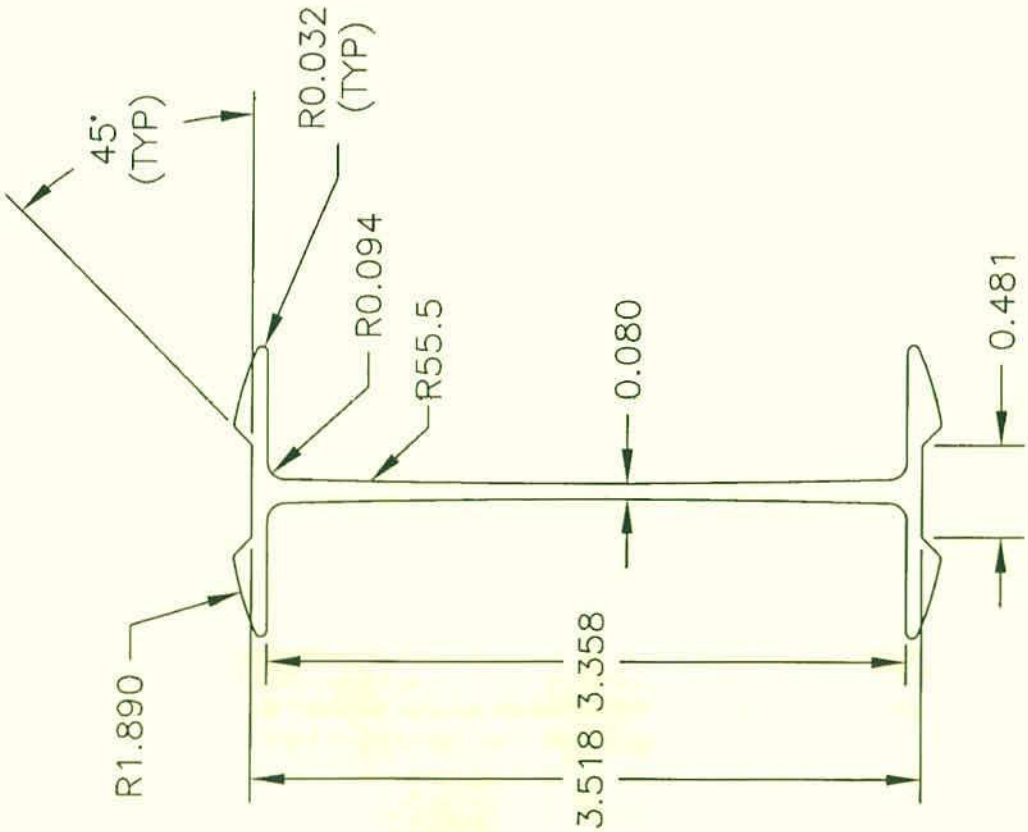

D2500-3

SHOP COPY
RETURN TO
ENGINEERING
UNCONTROLLED COPY
SUBJECT TO AMENDMENT
WITHOUT NOTICE
WORK ORDER
NO. 34729

CERTIFICATE OF COMPLIANCE

BON L CANADA INC

1850 CLEMENTS ROAD
PICKERING, ON L1W 3R8

Cert Date	Cert No	Sales Order	Page
09/30/07	166849	87380	1
Cust PO	**B/L No**	**Lot**	**Date**
4645	00359333	87380010	9/30/07

Sold To 46024	Ship To 46024
DART AEROSPACE LTD. 1270 ABERDEEN ST. HAWKESBURY, ON K6A 1K7	DART AEROSPACE LTD. 1270 ABERDEEN ST. HAWKESBURY, ON K6A 1K7

Item No	Part No	Item Description	Cust Part
1.000	DAA-897105-2	190" Mill 6061 T6	D2500-1-190
Gross Weight	816 KGS		
Net Qty	798 KG	63 PC 304 M	3 PKG

Specification	Die Desc
AMS-QQ-A-200/8 & ASTM B221-00	

Mechanical Tests:

Test No.	Tensile MPA / KSI	Yield MPA / KSI	%Elongation	Conductivity	Bend/ Drift HREW
1	299.2 / 43.4	276.3 / 40.1	10.4	.0	92

Chemical Limits:

	SI	FE	CU	MN	MG	CR	ZN	TI		OTHER
MIN:	.40	.00	.15	.00	.80	.04	.00	.00	EA:	.05
MAX:	.80	.70	.40	.15	1.20	.35	.25	.15	TOT:	.15

This will certify that the material described herein has been inspected and tested in accordance with Bon L Canada's standard sampling and testing procedures or in accordance with the requirements of any specifications forming a part of the material description to the extent indicated herein. Data of chemical composition for the material and test results from samples representative of the material are set forth above hereof or in any attachments hereto. This information shows that the material meets the applicable requirements. Inspection and test records are maintained on file. This certificate shall be deemed apart of and subject to the terms and conditions of warranty set forth on the reverse side of our order acknowledgement form. No other warranties are applicable.

Conchita Ko, QA Manager Signed for Bon L Canada

Conchita Ko.

BON L CANADA INC.

THE WILLIAM L. BONNELL COMPANY, INC.
BON L MANUFACTURING COMPANY
SUBSIDIARIES OF TREDEGAR CORPORATION
FILIALES DE LA CORPORATION TREDEGAR

ACCT# 00046024

INVOICING COMPANY AND LOCATION
BUREAU DE FACTURATION
BON L CANADA INC
1850 CLEMENTS ROAD
PICKERING ON L1W 3R8

SHIPPING MANIFEST
BORDEREAU D'EXPEDITION

MANIFEST DATE/DATE D'EXPÉDITION: 09-30-07

REFER TO THESE NUMBERS ON ALL CORRESPONDENCE. RÉFÉREZ-VOUS À CES NUMÉROS POUR TOUTE CORRESPONDANCE.

MANIFEST NUMBER/N° D'EXPÉDITION: 611861

SALES ORDER NUMBER/N° DE COMM.: 87380

SHIP TO/EXPÉDIÉ À
DART AEROSPACE LTD.
1270 ABERDEEN ST.
HAWKESBURY ON
K6A 1K7 CN

PHONE 613-632-5200

SOLD TO/VENDU À
DART AEROSPACE LTD.
1270 ABERDEEN ST.
HAWKESBURY ON
K6A 1K7 CN

PHONE 613-632-5200

*****
O/P
*****

CREDIT REP / REP. DU CRÉDIT: HAMBROOK, PAU 905-508-3250

SALES REP / REP. DES VENTES:

LOC/USINE	TRAILER NO./N° DE REMORQUE	SALESMAN/VENDEUR
PIC	57373	59358

FIELD SALES REP / REP. RÉGIONAL DES VENTES: Kutter A 450-435-6551

CUST SERVICE REP / REP. SERVICE CLIENTÈLE: Burton D 905-427-2227

CUSTOMER ID/N° DU CLIENT	ORDER DATE / DATE DE LA COMMANDE	CUST. P.O. NO./N° DE COMM. DU CLIENT	JOB/PROJET	BILL OF LADING NUMBER/N° DE CONNAISSEMENT
46024	09/21/07	4545		00359333

ITEM NO. / N° D'ITEM	ORDER QUANTITY / QTÉ COMMANDÉE	UNIT / UNITÉ	PREVIOUS SHIPPED QTY. / QTÉ DÉJÀ EXPÉDIÉE	MFG. PART NUMBER / N° DE PIÈCE DU FOURNISSEUR / CUSTOMER PART NUMBER / NUMÉRO DE PIÈCE DU CLIENT	ALLOY & TEMPER / ALLIAGE & TREMPE / LENGTH / LONGUEUR / CUTTING TOLERANCE / TOLÉRANCE DE COUPE	FINISH DESCRIPTION / DESC. DE LA FINITION / FABRICATION DESCRIPTION / TYPE DE FABRICATION / SHIPPING TOLERANCE / TOLÉRANCE D'EXPÉDITION	THIS SHIPMENT/CETTE EXPÉDITION: NO. PKGS. / N° DE PAQUETS	GROSS WT. / POIDS BRUT	NET WT. / POIDS NET	UNIT / UNITÉ	QUANTITY DUE / QUANTITÉ PRÉVUE
01		KG	0	DAA-897105-2	6061 /T6	MILL	3	816	798	KG	17
		M	0	D2500-1-190	190"	CERTIFICATE OF COMP			304.04	M	8
	80	PC	0		+5/16 "	(+010-010,0088-0072)			63	PC	1
					-0 "						
				DETAIL; LOT/TICKET		87380010 / 246417	1	298	292		23 PC
						87380010 / 246418	1	298	292		23 PC
						87380010 / 246419	1	220	214		17 PC
						TOTALS/TOTAUX	3	816	798	KG	
									304.04	M	
									63	PC	

7/10/01

FORM NO. B1065 REV. C
RETURN MATERIALS WILL BE ACCEPTED FOR CREDIT WITHOUT PERMISSION
DON-RETOUR DE MATÉRIEL NE SERA ACCEPTÉ POUR CRÉDIT SANS AUTORISATION

SHIPPER
EXPÉDITEUR

CUSTOMER ACKNOWLEDGEMENT OF GOODS DELIVERED AND CONDITION/RECONNAISSANCE DU CLIENT DU MATÉRIEL LIVRÉ ET SON ÉTAT